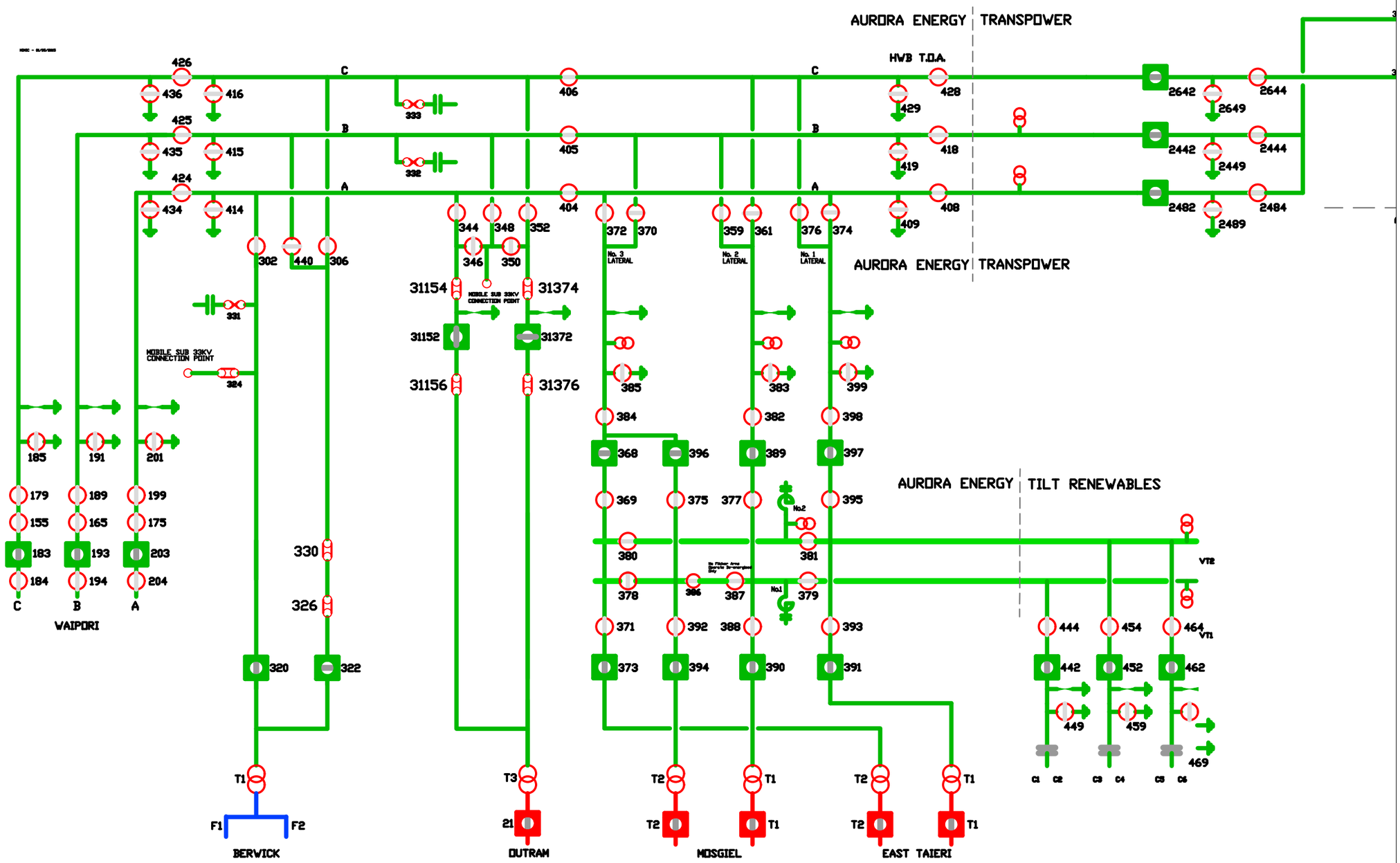

Approved: 10/05/23

Date Issued: 11/05/23